European Type Electric Strike

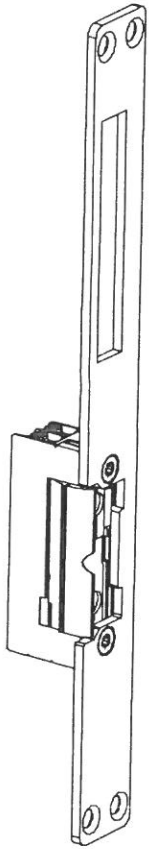

INSTALLATION

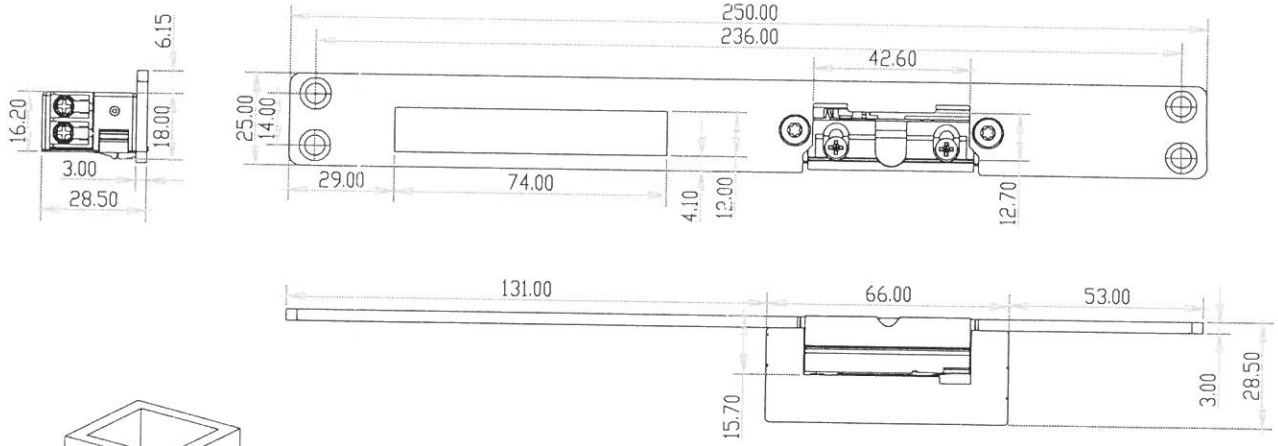

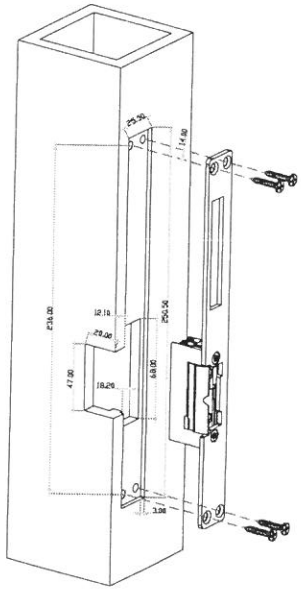

SPECIFICATION

Face plate: 250Lx25Wx28.5H(mm)
Voltage: 12V DC
Current: 280mA
Feature: Fail Secure(NO)
Weight: 0.35kg